Exam 5EE40 Electrical Power Engineering & System Integration
Wednesday 27 January 2010, 9.00-12.00.

6 problems, 5 pages.

Problem 1 (1 point)

A 3-phase 50 Hz network with a phase voltage of 230V is feeding a symmetrical load $Z_{load} = (100 - j100)\Omega$ connected in Y-connection. Calculate the total apparent power and the total active and reactive power.

Problem 2 (1 point)

A 3-phase electromotor with an apparent power S = 30 kVA, is connected in "delta" to a 50 Hz three phase grid with a line voltage of 400 V. The powerfactor is cosφ = 0,8 (inductive).

a) Calculate the line-currents in the supplygrid, and the currents in the windings of the motor.
b) What is the value of the compensating capacitors (in μF per phase, connected in "star") to reduce the powerfactor to cosφ' = 0,95 ?

Problem 3 (2 points)

A 3-phase, 2300V, 60Hz, 6-pole, Y-connected synchronous motor has 4.5 ohms per phase synchronous reactance and negligible stator winding resistance. The motor is connected to an infinite bus and draws 250 A at 0.8 power factor lagging.

a) Determine the output power, consider no (mechanical or electrical losses).
b) Determine the power to which the motor can be loaded slowly without losing synchronism. Determine the torque, stator current, and supply power factor for this condition.
c) Draw the equivalent electrical scheme and phasor diagram.

Problem 4 (2 points)

Consider a sinusoidal-PWM single-phase full-bridge inverter connected to the grid through an inductor $L_s = 20\,\text{mH}$ (see figure below), where $v_s(t) = \sqrt{2}\,V_s \sin \omega_s t$ with $V_s = 220Vrms$ and $\omega_s = 2\pi * 50\,rad/s$.

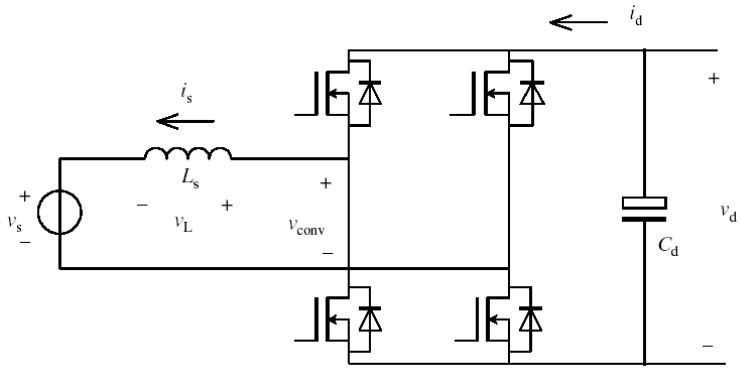

The inverter dc voltage, v_d, can vary between 350Vdc and 700Vdc. The 50Hz component of $v_{conv}(t)$, the voltage at the inverter ac terminals, is controlled by the modulation index m_a (with $|m_a| < 1.0$) such that the rms of $v_{conv}(t)$ is found to be $V_{conv} = m_a V_d / \sqrt{2}$.

a) What is the highest rms value of the inverter output ac voltage, $V_{conv,\max}$, that can always be assured in spite of the dc voltage variations?

b) The volt-ampere rating of the inverter is specified as 5000 VA, that is, $V_{conv,\max} I_{s,\max} = 5000\,\text{VA}$, where I_s denotes the rms value of $i_s(t)$, the inverter output current. Calculate the peak value of the current through the switches and the peak value of the voltage across the switches when $v_d = 700\text{Vdc}$.

c) Draw a phasor diagram representing v_{conv} and v_s, and calculate the corresponding phase angle δ between the voltage phasors when $v_d = 700\text{Vdc}$, $m_a = 0.5$ and with the inverter delivering 2000 W to the grid.

Problem 5 (2 points)

The figure below shows a medium voltage network. The nodes are connected via cables. The loads P11-P13, and P21-P22 are similar (2 MW/0.66 MVAr). Due to a new building project, the load P23 is twice the load at the other nodes (4 MW/2.4 MVAr). A connecting cable K between the nodes MV13 and MV23 is open (not connected at node MV23). Also the generator at node MV23 is not connected.

a) A loadflow calculation for this network is given below. Explain the various voltage levels at the nodes, and the current levels of the cables. Explain the current in the cable between MV13-MV23.

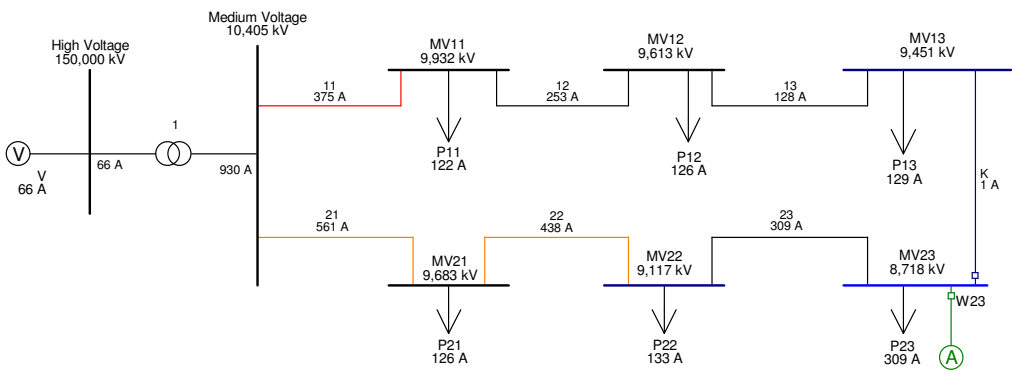

b) To improve the voltage level at nodes MV22 and MV23, three situations are evaluated: i) closing of the connecting cable K between MV13 and MV23, (ii) an asynchronous generator to node MV23 (connecting cable K open), and iii) a synchronous generator to MV23 (connecting cable K open). Both the asynchronous and the synchronous generator have a similar nominal power rating of 4 MW. The loadflow calculations for these three situations are given below. Answer the following questions:

- For each situation, explain the various voltage levels at the nodes, and the current levels in the cables.
- Apparently, the asynchronous and the synchronous generator behave differently. What is the major difference between the two generator-types?
- What is the best solution, and motivate your answer?

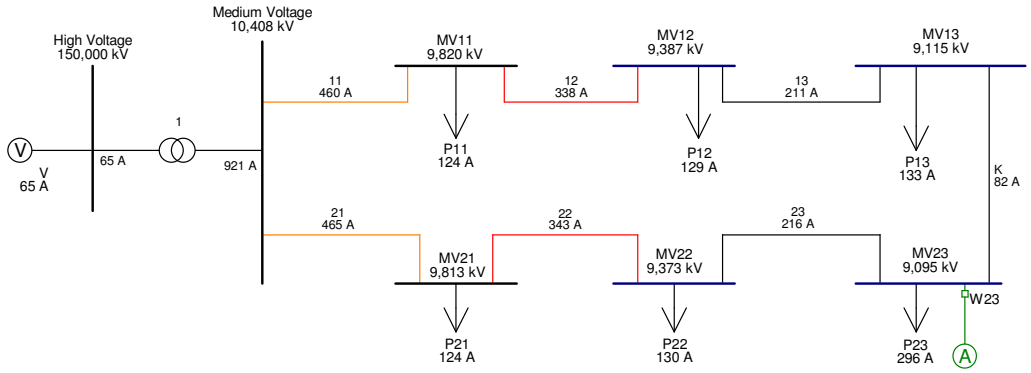

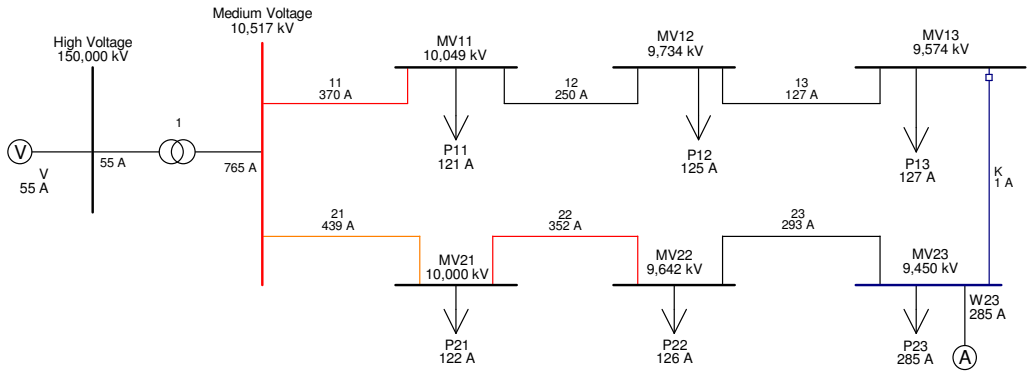

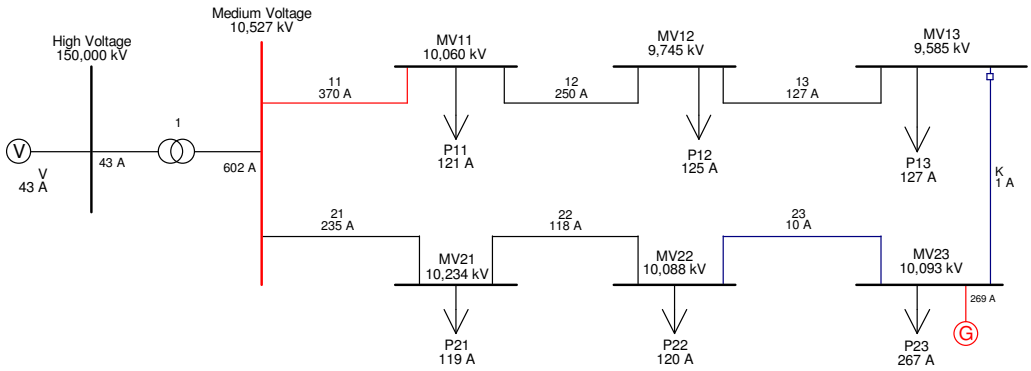

Problem 6 (2 points)

A manufacturer of street lights wants to develop a new autonomous street light for the Netherlands operating on solar energy. The light must be on from sunset to sunrise every day. To minimize maintenance costs, the $12V_{DC}$ battery may only be replaced once every 5 years since this is also the expected lifetime of the light. The light has a power of 26W and operates on a voltage of 230VAC. The required inverter has an efficiency of 95%. Each separate section of DC cable in the system has an efficiency of 99%. The battery has an efficiency of 90%. The solar panels are mounted on top of the street lights with an angle of 30 degrees south. Please make use of Tables 1 and 2 and Figures 1 and 2 to answer the following questions.

a) Draw a block scheme of the installation. [20%]
b) Calculate the size of the battery (Ah). [40%]
c) Calculate the required power (Wp) of the solar panel. To determine the maximum power of a panel, the panels have been tested under standard test conditions (STC=1kW/M2). [30%]
d) What can be done to improve the system? [10%]

Table 1: *times of sunrise and sunset in 2010. (Translations: dag = day; op = sunrise; onder = sunset)*

	JANUARI		FEBRUARI		MAART		APRIL		MEI		JUNI		JULI		AUGUSTUS		SEPTEMBER		OKTOBER		NOVEMBER		DECEMBER		
dag	op	onder	op	onder	op	onder	op	onder	op	onder	op	onder	op	onder	op	onder	op	onder	op	onder	op	onder	op	onder	dag
1	8.48	16.39	8.20	17.28	7.26	18.19	7.15	20.13	6.11	21.05	5.26	21.50	5.24	22.03	6.01	21.30	6.51	20.28	7.41	19.18	7.35	17.12	8.25	16.32	1
2	8.48	16.40	8.19	17.29	7.24	18.21	7.13	20.15	6.09	21.06	5.25	21.51	5.25	22.03	6.03	21.28	6.53	20.25	7.42	19.16	7.36	17.10	8.27	16.32	2
3	8.48	16.41	8.17	17.31	7.22	18.23	7.11	20.17	6.07	21.08	5.25	21.52	5.26	22.02	6.05	21.27	6.55	20.23	7.44	19.13	7.38	17.08	8.28	16.31	3
4	8.48	16.43	8.15	17.33	7.20	18.25	7.09	20.19	6.05	21.10	5.24	21.53	5.26	22.02	6.06	21.25	6.56	20.21	7.46	19.11	7.40	17.07	8.29	16.31	4
5	8.47	16.44	8.14	17.35	7.17	18.27	7.06	20.20	6.03	21.11	5.23	21.54	5.27	22.01	6.08	21.23	6.58	20.18	7.47	19.09	7.42	17.05	8.31	16.30	5
6	8.47	16.45	8.12	17.37	7.15	18.28	7.04	20.22	6.01	21.13	5.23	21.55	5.28	22.01	6.09	21.21	7.00	20.16	7.49	19.06	7.44	17.03	8.32	16.30	6
7	8.47	16.46	8.10	17.39	7.13	18.30	7.02	20.24	6.00	21.14	5.22	21.56	5.29	22.00	6.11	21.20	7.01	20.14	7.51	19.04	7.45	17.01	8.33	16.29	7
8	8.46	16.48	8.08	17.41	7.11	18.32	6.59	20.25	5.58	21.16	5.22	21.57	5.30	21.59	6.12	21.18	7.03	20.12	7.52	19.02	7.47	17.00	8.34	16.29	8
9	8.46	16.49	8.07	17.42	7.08	18.34	6.57	20.27	5.56	21.18	5.21	21.58	5.31	21.59	6.14	21.16	7.04	20.09	7.54	19.00	7.49	16.58	8.36	16.29	9
10	8.45	16.50	8.05	17.44	7.06	18.35	6.55	20.29	5.55	21.19	5.21	21.59	5.32	21.58	6.16	21.14	7.06	20.07	7.56	18.57	7.51	16.57	8.37	16.29	10
11	8.44	16.52	8.03	17.46	7.04	18.37	6.53	20.31	5.53	21.21	5.20	21.59	5.33	21.57	6.17	21.12	7.08	20.05	7.57	18.55	7.53	16.55	8.38	16.28	11
12	8.44	16.53	8.01	17.48	7.02	18.39	6.50	20.32	5.51	21.23	5.20	22.00	5.34	21.56	6.19	21.10	7.09	20.02	7.59	18.53	7.54	16.53	8.39	16.28	12
13	8.43	16.55	7.59	17.50	6.59	18.41	6.48	20.34	5.50	21.24	5.20	22.01	5.35	21.55	6.20	21.08	7.11	20.00	8.01	18.51	7.56	16.52	8.40	16.28	13
14	8.42	16.56	7.57	17.52	6.57	18.42	6.46	20.36	5.48	21.26	5.20	22.01	5.37	21.54	6.22	21.06	7.13	19.58	8.03	18.49	7.58	16.51	8.41	16.28	14
15	8.41	16.58	7.55	17.54	6.55	18.44	6.44	20.37	5.47	21.27	5.19	22.02	5.38	21.53	6.24	21.04	7.14	19.55	8.04	18.46	8.00	16.49	8.42	16.29	15
16	8.40	17.00	7.53	17.56	6.52	18.46	6.42	20.39	5.45	21.29	5.19	22.02	5.39	21.52	6.25	21.02	7.16	19.53	8.06	18.44	8.01	16.48	8.42	16.29	16
17	8.39	17.01	7.51	17.57	6.50	18.48	6.40	20.41	5.44	21.30	5.19	22.03	5.40	21.51	6.27	21.00	7.17	19.51	8.08	18.42	8.03	16.46	8.43	16.29	17
18	8.38	17.03	7.49	17.59	6.48	18.49	6.37	20.43	5.42	21.32	5.19	22.03	5.42	21.50	6.29	20.58	7.19	19.48	8.10	18.40	8.05	16.45	8.44	16.29	18
19	8.37	17.04	7.47	18.01	6.46	18.51	6.35	20.44	5.41	21.33	5.19	22.03	5.43	21.49	6.30	20.56	7.21	19.46	8.11	18.38	8.06	16.44	8.45	16.30	19
20	8.36	17.06	7.45	18.03	6.43	18.53	6.33	20.46	5.39	21.35	5.20	22.04	5.44	21.48	6.32	20.54	7.22	19.44	8.13	18.36	8.08	16.43	8.45	16.30	20
21	8.35	17.08	7.43	18.05	6.41	18.55	6.31	20.48	5.38	21.36	5.20	22.04	5.45	21.47	6.34	20.52	7.24	19.41	8.15	18.34	8.10	16.41	8.46	16.30	21
22	8.34	17.10	7.41	18.07	6.39	18.56	6.29	20.49	5.37	21.38	5.20	22.04	5.47	21.45	6.35	20.50	7.26	19.39	8.17	18.32	8.11	16.40	8.46	16.31	22
23	8.33	17.11	7.39	18.08	6.36	18.58	6.27	20.51	5.35	21.39	5.20	22.04	5.48	21.44	6.37	20.47	7.27	19.37	8.18	18.29	8.13	16.39	8.47	16.31	23
24	8.32	17.13	7.37	18.10	6.34	19.00	6.25	20.53	5.34	21.40	5.21	22.04	5.50	21.43	6.38	20.45	7.29	19.34	8.20	18.27	8.15	16.38	8.47	16.32	24
25	8.30	17.15	7.35	18.12	6.32	19.01	6.23	20.54	5.33	21.42	5.21	22.04	5.51	21.41	6.40	20.43	7.31	19.32	8.22	18.25	8.16	16.37	8.47	16.33	25
26	8.29	17.17	7.33	18.14	6.29	19.03	6.21	20.56	5.32	21.43	5.21	22.04	5.53	21.40	6.42	20.41	7.32	19.30	8.24	18.23	8.18	16.36	8.48	16.33	26
27	8.28	17.18	7.31	18.16	6.27	19.05	6.19	20.58	5.31	21.44	5.22	22.04	5.54	21.38	6.43	20.39	7.34	19.27	8.26	18.21	8.19	16.35	8.48	16.34	27
28	8.26	17.20	7.28	18.18	7.25	20.07	6.17	21.00	5.30	21.45	5.22	22.04	5.55	21.37	6.45	20.37	7.36	19.25	8.27	18.20	8.21	16.35	8.48	16.35	28
29	8.25	17.22			7.22	20.08	6.15	21.01	5.29	21.47	5.23	22.04	5.57	21.35	6.47	20.34	7.37	19.23	8.29	18.18	8.22	16.34	8.48	16.36	29
30	8.23	17.24			7.20	20.10	6.13	21.03	5.28	21.48	5.24	22.03	5.58	21.33	6.48	20.32	7.39	19.20	8.31	18.16	8.24	16.33	8.48	16.37	30
31	8.22	17.26			7.18	20.12			5.27	21.49			6.00	21.32	6.50	20.30			7.33	17.14			8.48	16.38	31

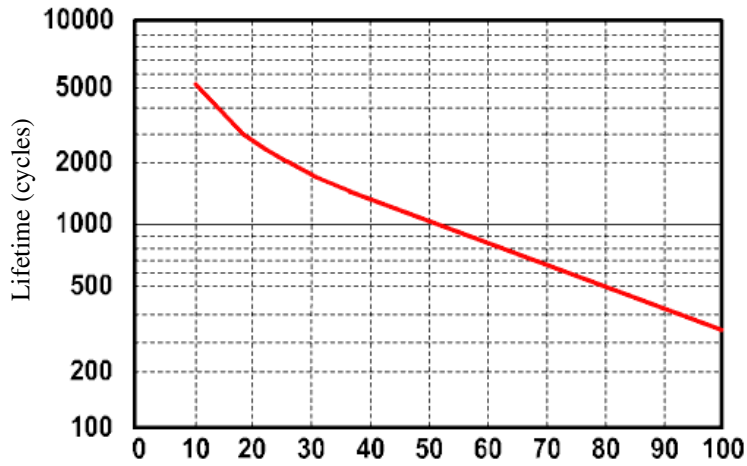

Figure 1: *Lifetime (cycles) versus depth of discharge (%) of a deep cycle sealed battery.*

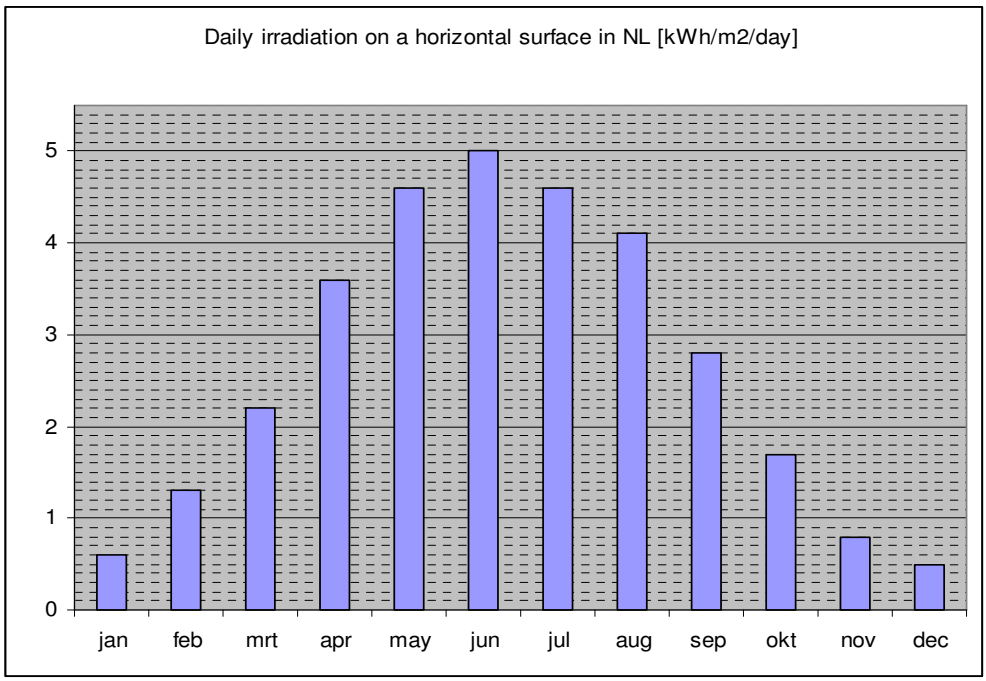

Figure 2: *Daily irradiation in NL*

Table 2: *Correction factors for PV systems in the Netherlands*

	Jan	Feb	Mar	Apr	May	Jun	Jul	Aug	Sep	Oct	Nov	Dec
$V_{incl(30degSouth)}$	1.44	1.4	1.17	1.08	1	0.96	0.97	1.03	1.17	1.31	1.41	1.47
V_{temp}	1.02	1.02	0.95	0.91	0.88	0.87	0.86	0.86	0.89	0.98	1	1.02
V_{ref}	0.95	0.95	0.95	0.95	0.95	0.95	0.95	0.95	0.95	0.95	0.95	0.95

Solutions:

Problem 1
Apparent power in one phase:

$$\underline{S}_{1p} = \frac{V_{phase}^2}{\underline{Z}^*} = \frac{(230V)^2}{(100 + j100)\Omega} = (264{,}5 - j264{,}5)VA$$

$$\underline{S}_{tot} = 3\underline{S}_{1p} = (793{,}5 - j793{,}5)VA \text{ capacitive}$$

$$\underline{I} = \frac{V}{\underline{Z}} = \frac{230V}{(100 - j100)\Omega} = (1{,}15 + j1.15)A$$

Problem 2
a)
$S = \sqrt{3}\, U_n\, I \Rightarrow I = S / (\sqrt{3}\, U_n) = \{30 / (\sqrt{3}\, 400)\}$ kA = <u>43,30 A</u>
$I_W = I / \sqrt{3} = \{43{,}30 / \sqrt{3}\}$ A = <u>24,99 A</u>

b)
$P = S \cos \varphi = (30\ 0{,}8)$ kW = 24 kW
$Q = S \sin (\text{arc} \cos \varphi) = (30\ 0{,}6)$ kVAr = 18 kVAr
$Q' = P \tan \varphi' = P \tan (\text{arc} \cos \varphi') = 24\ 0{,}328$ kVAr = 7,888 kVAr

$Q_C = Q - Q' = (18 - 7{,}888)$ kVAr = 10,11 kVAr
$Q_{Cfase} = Q_C / 3 = (10{,}11 / 3)$ kVAr = 3,37 kVAr = $(U/\sqrt{3})^2 / X_{Cfase}$
$X_{Cfase} = U^2 / (3\ Q_{Cfase}) = (400^2 / (3\ 3{,}37)\ m\Omega = 15{,}82\ \Omega = 1 / (\omega\, C_{fase})$
$C_{fase} = \{1 / (2\ \pi\ 50\ 15{,}82)\}$ F = <u>201,1 µF</u>

Problem 3
….elena

Problem 4

(a)

$$V_{conv,\max} = m_{a,\max} V_{d,\min} / \sqrt{2} = 1.350/\sqrt{2}$$
$$= 247\ Vrms$$

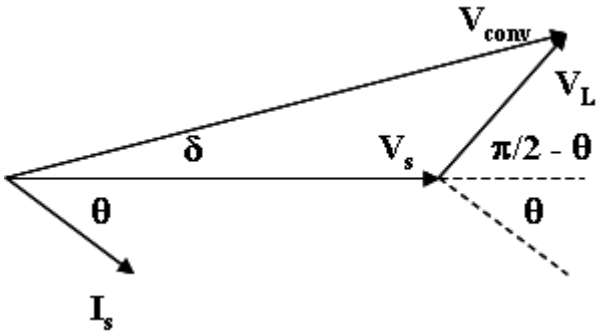

(b)

$$I_{s,\max} = \frac{5000\,\text{VA}}{V_{conv,\max}} = \frac{5000}{247} = 20.2\ Arms$$
$$I_{s,peak} = \sqrt{2}\ I_{s,\max} = 28.6\ A$$
Switch peak current = $I_{s,peak} = 28.6\ A$

Switch peak voltage = $v_d = 700\ V$

(c)

$$V_{conv} = m_a V_d / \sqrt{2} = 0.5.700/\sqrt{2}$$
$$P = \frac{V_s V_{conv}}{2\pi f L_s} \sin\delta$$
$$\sin\delta = \frac{2*\pi*50*20e-3*2e+3}{220*0.5*700/\sqrt{2}} = 0.231$$
$$\delta = 0.233\ rad = 13.3\,\text{deg}$$

Problem 2

…elena

Problem 3

PV street light

Shortest day:		21-dec									
Light	8:46	16:30		7,73	hours			**2nd Option battery size based on full year**			
Longest night				16,27	hours			Battery for		16,27	hours
								Capacity		504,7024	
Longest day:		21-jun						Average use per nigl		11,76667	
Light	5:20	22:04		16,73	hours			Required capacity		365,0819	Wh / night average
Shortest night				7,27				5 years --> 2000 cycles			
								DOD		0,25	
								Battery capacity		1460,328	
	Consumption		Watt		Energy [Wh/day]			Battery voltage		12	
Light			26	16,27	422,9333	Wh		Battery capacity [Ah]		121,694	Ah
Inverter efficiency		0,95			445,193	Wh					
Efficiency cable BC - I		0,99			449,6899	Wh					
Efficiency cable B - BC		0,99			454,2322	Wh					
Battery efficiency		0,9			504,7024	Wh					
Depth of discharge		0,25			2018,81	Wh		5 years	1825	cycles	
Battery voltage		12			168,2341	Ah					
Efficiency cable BC - B		0,99			509,8005	Wh					
Efficiency cable PV - BC		0,99			514,95	Wh					
Irradiation in Dec on horizontal surface					0,5	kWh/m2/dag					
Vincl		1,47			0,735						
Vtemp		1,02			0,7497						
Vref		0,95			0,712215	kWh/m2/dag					
Required panel size					723,026	Wp					
Options to improve:											
	- decrease lighting during night										
	- switch of light during some hours										
	- light with less power										
	- small wind turbine on top of light										